Sep.1.2025 Copyright 2025 HIROSE ELECTRIC CO., LTD. All Rights Reserved.
In case of consideration for using Automotive equipment / device which demand high reliability, kindly contact our sales window correspondents.

ELV, RoHS COMPLIANT

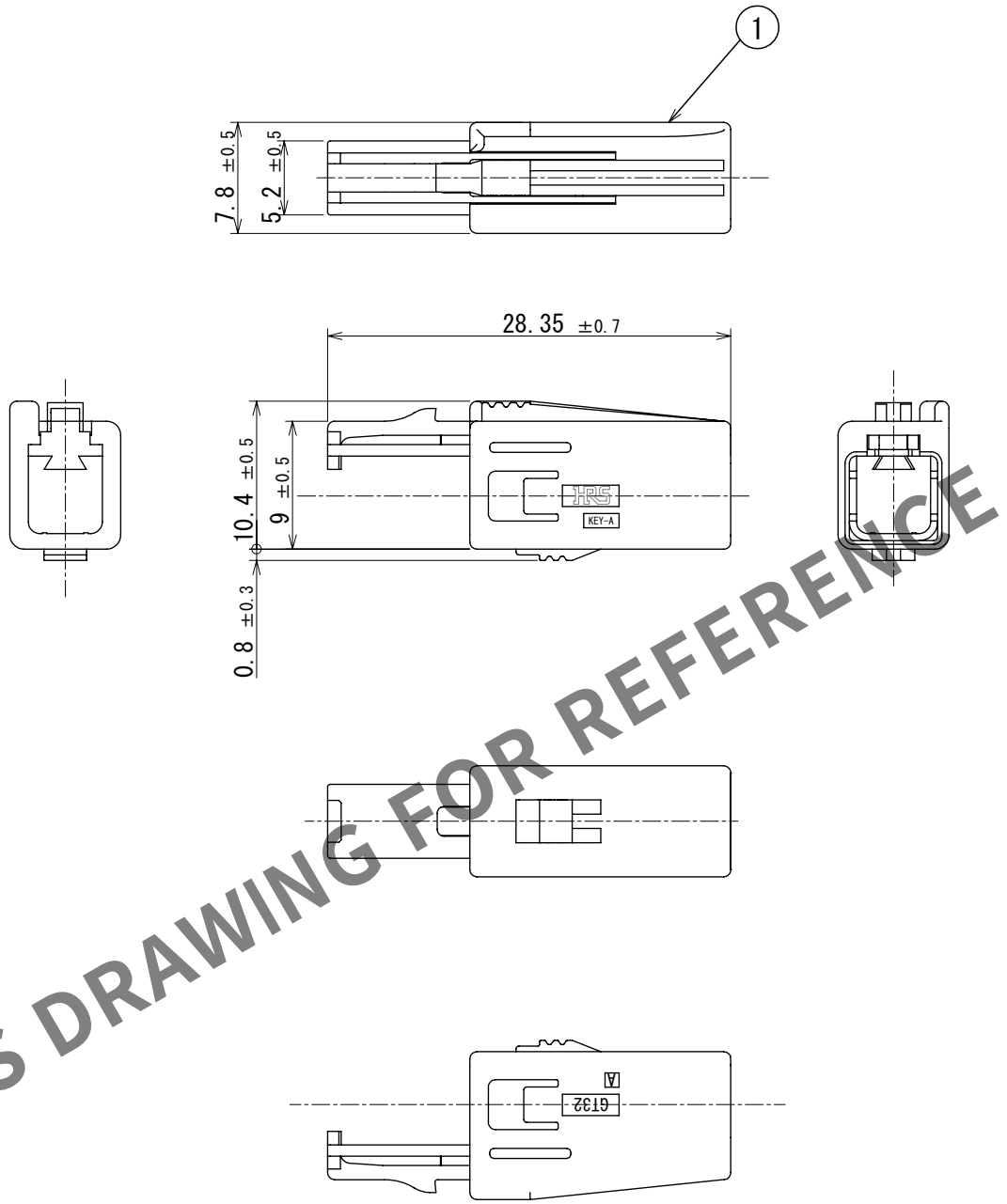


HRS DRAWING FOR REFERENCE

| NO. | MATERIAL | FINISH , REMARKS | NO. | MATERIAL | FINISH , REMARKS |
|---|---|---|---|---|---|
| 1 | PBT | BROWN | | | |

| UNITS | SCALE | COUNT | DESCRIPTION OF REVISIONS | DESIGNED | CHECKED | DATE |
|---|---|---|---|---|---|---|
| mm | 2:1 | 0 | DIS-T-00018494 | KN. YANAGIMOTO | EJ. WAKATSUKI | 2023.08.10 |

HIROSE ELECTRIC CO., LTD.

| | | |
|---|---|---|
| APPROVED | : NH. NAKATA | 2015.09.10 |
| CHECKED | : NH. NAKATA | 2015.09.10 |
| DESIGNED | : NK. IKUTA | 2015.09.10 |
| DRAWN | : NK. IKUTA | 2015.09.10 |

| | |
|---|---|
| DRAWING NO. | EDC-361246-00-00 |
| PART NO. | GT32-4DS-HU(A) |
| CODE NO. | CL0782-0055-0-00 |

1 / 1

FORM HC0011-5